Name: _____

Date: _____

Class: _____

IB ESS

# 2.4 Biomes, Zonation and Succession

## Significant Ideas:

Climate determines the type of biome in a given area although individual ecosystems may vary due to many local abiotic and biotic factors.

Succession leads to climax communities that may vary due to random events and interactions over time. This leads to a pattern of alternative stable states for given ecosystems.

Ecosystem stability, succession and biodiversity are intrinsically linked.

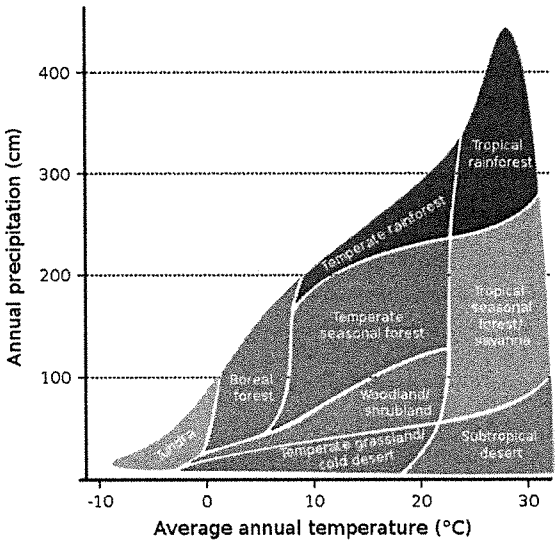


Image: Navarras (CC0)
https://upload.wikimedia.org/wikipedia/commons/6/68/Climate_influence_on_terrestrial_biome.svg

## Biomes and Their Distribution

1. Define "biome".

Collections of ecosystems sharing similar climatic conditions

2. There are lots of types of biome but they can be grouped into five major classes. List them.

Aquatic

Deserts

Forests

Grassland

Tundra

3. The distribution of biomes is largely affected by productivity, which is influenced by photosynthesis. State how the following climatic variables affect the rate of photosynthesis

| Climate Variable | Effect on photosynthesis |
|---|---|
| Insolation | The greater the insolation (sunlight) the higher the rate of photosynthesis |
| Temperature | The greater the temperature the higher the rate of photosynthesis |
| Precipitation | The greater the precipitation the higher the rate of photosynthesis |

4. What else, apart from climate, can influence the distribution of biomes.

Latitude and altitude

5. State the type of biome of the area that you currently live in.

Desert

6. On the world map below, label **one** example of **each** biome. Name the nation and/or region that you have labeled in each case. Complete the details in the table. One has been done as an example.

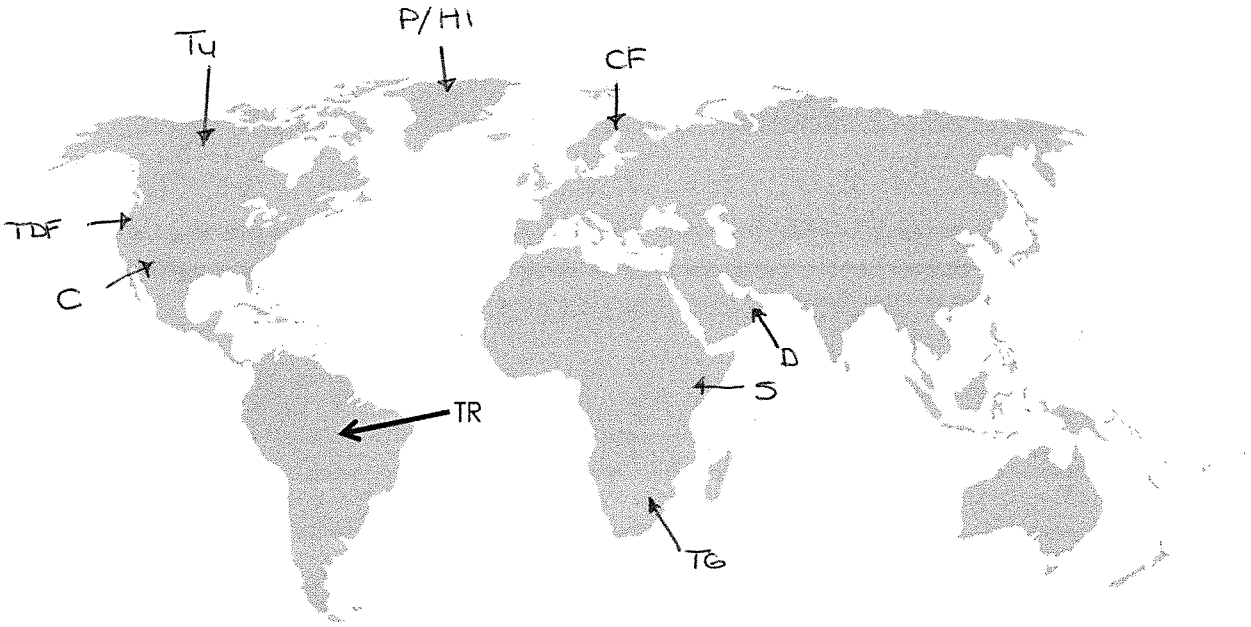


Biomes can be grouped into five major classes: aquatic, forest, grassland, desert and tundra

| Label | Biome | Name | Nation/region |
|---|---|---|---|
| TR | Tropical Rainforest | The Amazon | Brazil |
| S | savannah | Awash national Park | Ethiopia |
| D | desert | Wahiba sands | Oman |
| P/HI | polar / high-montane ice | Arctic | Arctic |
| C | Chapparal | Los Padres Forest, California | U.S.A. |
| TG | Temperate grassland | Veld of kruger national park | South Africa |
| TDF | Temperate deciduous forest | Great Smoky mountains National Park | U.S.A |
| CF | Coniferous forest | Sälhanfjell national park | Norway |
| Tu | Tundra | Island of Arctic Ocean | Arctic and Alpine |

NB: Different sources have alternate categories



you will need to study at least four contrasting pairs of biomes.
e.g. coral reefs and hydrothermal vents

## Factors Influencing Biomes

1. Without taking seasonal changes into account, <u>describe</u> how latitude affects insolation and temperature.

It generally gets colder as you increase latitude. This is because at the equator solar radiation hits the Earth at 90° angle so it is more intense as you move away from the equator the rays hit the Earth at a more accute angle so are spread out over a greater surface area.

2. With the help of a diagram, **explain** the changes described above.

*Hint: solar zenith angle* –

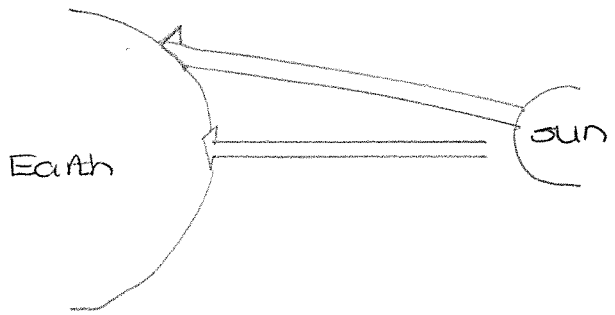


The angle formed by rays of sunlight hitting the Earth is known as the angle of incidence. Rays striking at 90° (directly above) are the most intense. The smaller the angle, the greater the surface area over which the rays spread.

3. The diagram below shows the relationship between temperature, precipitation and biomes.

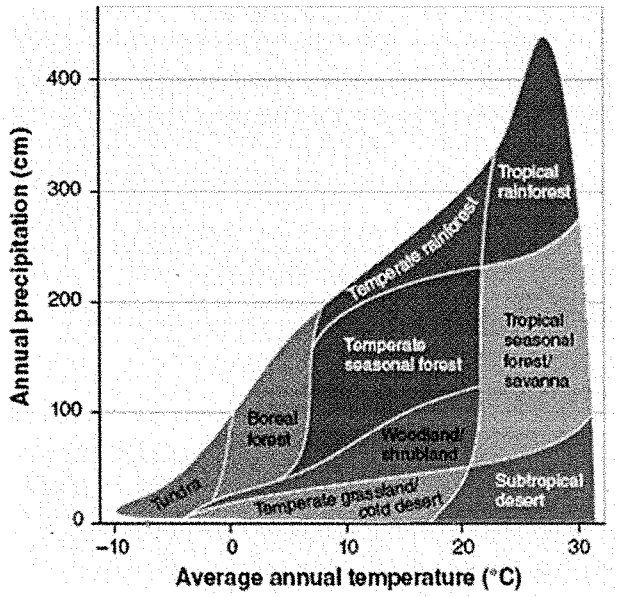


Show your working for these questions. What precipitation and temperature values will result in...

*i)* ***A tropical rainforest***

Precip. Range: 220 - 450 cm

Temp. Range: 20 - 30 °C

*ii)* ***Tundra***

Precip. Range: 0 - 100 cm

Temp. Range: -10 - -6 °C

Image ref: https://en.wikipedia.org/wiki/Biome#/media/File:PrecipitationTempBiomes.jpg (Creative Common 0 license)

4. Precipitation to evaporation ratios (P/E) influence soil conditions. Explain why...

a) ...a high P/E results in low soil fertility:

It rains or snows a lot and evaporation rates are low. Then there is leaching in the soil when soluble minerals are washed downwards.

b) ...a low P/E results in salinization of soil:

Water moves upwards through the soil and evaporates from the surface. This leaves salts behind and the soil salinity increases.

5. Complete the diagram below to represent the tri-cellular model of atmospheric circulation. **Label** your diagram.

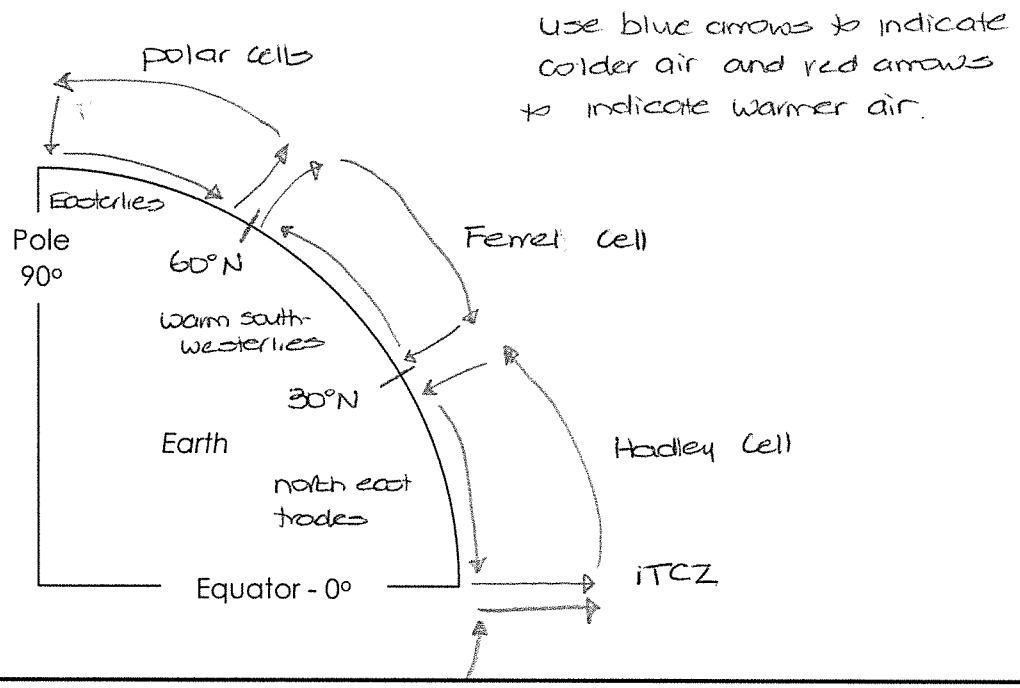


6. With reference to the tri-cellular model, summarise what is happening in terms of air movement and precipitation at the following places:

| Location | Air/precipitation |
|---|---|
| ITCZ | Warm air rises. Water condenses as it rise so there is high amount of precipitation |
| Between 90° and 60° | Cold air is moving from the Pole (90°) to 60° creating the Easterlies |
| At 60° | Warm air from Ferrel cell meets cold air from Polar cell. It is less dense so rises causing low pressure + precipitation |
| Between 60° and 30° | Warm air is moving from 30° to 60° creating the warm south westerlies |

7. Most scientists agree that the global climate is changing. As a result, biomes are moving.

Link to Booklet 7.2

a) Outline the changes that are occurring worldwide as a consequence of global climate change.

With changes in global temperatures in the future models suggest a north/south shift in biomes relative to the equator (a latitudinal shift). Biomes will also move up slopes (altitudinal shift) as on mountains. Low-lying biomes e.g. mangroves may be lost due to sea-level rise

b) Briefly explain the ways some species are moving in response to climate change.

Plants can only migrate very slowly as seeds are dispersed by wind or animals. Animals can migrate longer distances - they will move towards the poles where it is cooler, higher up in the mountains where it is cooler, towards the equator where it is wetter (but hotter)

c) Summarise the limits to species movement and migration.

There are natural obstacles to migration like mountain ranges and seas and ones caused by human activities such as roads, agricultural fields and cities

## Zonation

1. Define "Zonation":

is the change in community along an environmental gradient due to factors such as changes in altitude, latitude, tidal level or distance from shore/coverage by water.
Tends to occur in parallel lines

2. Complete the table below to show the factors that vary with altitude and how they vary. One of them has been completed for you.

| Factor | How it varies |
|---|---|
| *Temperature* | *Decreases as altitude increases.* |
| precipitation | on mountains, most rainfall is at the middle altitudes so deciduous forests grow. Higher up the air is too dry and cold for trees |
| solar insolation | more intense at higher altitudes and plants have to adapt - often with red pigments in their leaves to protect them against too much insolation |
| soil type | in warmer zones, decomposition is faster so soils are deeper and more fertile. Higher up decomposition is slow and the soil tends to be more acidic |
| Interactions between species | competition may crowd out some species and grazing may alter plant composition mycorrhizal fungi may be very important in allowing trees to grow in some zones. |

3. Kite diagrams are an effective way to show how species abundance changes along an environmental gradient. Use the kite diagram below to answer the questions

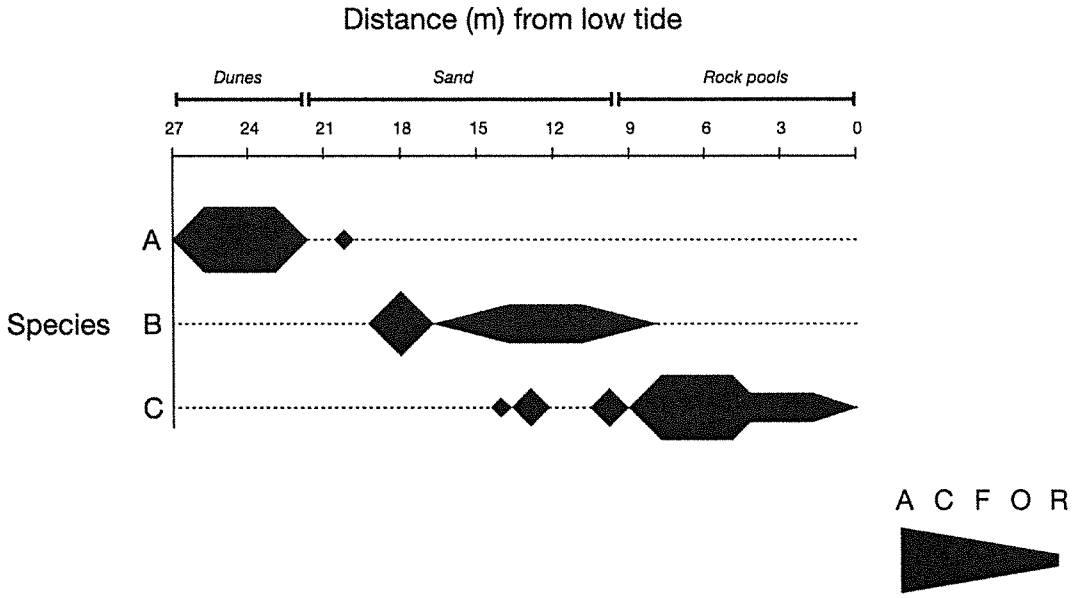


a) State which species is most abundant in rock pools

C

b) State which species is present furthest from the shoreline

A

c) Using the ACFOR scale, state the maximum abundance of the following species in the specified location:

| Species | Location | Abundance (ACFOR) |
|---|---|---|
| A | Sand | R |
| B | Sand | A |
| C | Sand | F |
| A | Rock pools | R |

## Succession

1. State what is meant by the term "succession" of an ecosystem.

is the process of change over time in an ecosystem involving pioneer, intermediate and climax communities

2. Distinguish between primary and secondary succession.

Primary succession occurs on bare ground where soil formation starts the process.

Secondary succession occurs where the soil has already been formed but the vegetation has been removed.

3. Give 2 circumstances in which primary and secondary succession may occur.

| Circumstances in which primary succession may occur | Circumstances in which secondary succession may occur |
|---|---|
| new land is created or uncovered - river deltas, volcanic eruptions, sand dunes | Established community destroyed fire, flood, human activity |

(For the following two questions, think carefully about what the command words are asking for).

4.

a) **Describe** the changes in both NPP and GPP that occur throughout succession.

Early stages: low GPP but high percentage NPP

Middle stages: high GPP, lower NPP

Later stages: high GPP, NPP reaches zero.

b) **Explain** the changes in both NPP and GPP that occur throughout succession.

In the early stages the GPP is low because of the low density of producers due to lack of soil water and nutrients. The NPP is high as the proportion of energy lost during community respiration is low. (the ecosystem is growing and biomass is accumulating)

In the later stages higher consumer community. The gross productivity is balanced by respiration so the net productivity approaches 0 as the ratio of production to respiration approaches 1.

5. Complete the boxes to show the stages of primary succession

| Sere Stage | Terrain/soil | Biota |
|---|---|---|
| Bare surface | No real soil. Only mineral particles. | None. |
| Stage 1: colonization | Simple soil starts from windblown dust and mineral particles | Pioneer species.<br>R-selected species, small in size with short life cycles and rapid growth. |
| Stage 2: Establishment | Invertebrates increase humus (organic matter) content and water-holding capacity. Weathering enriches soil with nutrients. | Species diversity increases. Invertebrate species begin to visit and live in the soil. |
| Stage 3: Competition | micro-climate continues to change as new species colonize. Temperature, sun and wind less extreme. Soil depth increases. | Larger plants increase cover and provide shelter, enabling K-selected species to become established. |
| Stage 4: Stabilisation | Soil depth and humus content increases, soil acidity increases, decreasing blown sand movement, increasing water holding capacity. | Fewer new species colonize as late colonizers become established, shading out early colonizers. Complex food webs develop. |
| Climax community | Stable - recycles nutrients. Soil is generally fertile due to leaf litter decomposition. | Stable and self-perpetuating ecosystem. Shade tolerant trees |

Survivorship curves for R and K strategists and characteristics should be studied here

6. Outline how the following change throughout succession

| | |
|---|---|
| NPP | Increase from pioneer to climax |
| GPP | Decreases from pioneer to climax |
| Productivity:Respiration ratio | Tends to approach 1 as community moves towards climax community |
| Soil depth | Initially shallow, deepens |
| Complexity of ecosystem | Biodiversity increases because more niches appear and then fall as the climax community is reached. |
| Energy flow | Energy flow becomes more complex as simple food chains become complex food webs. |
| Average organism size | The size of organisms increases with trees creating a more hospitable environment. |

7. The specific climax community that is formed from succession will vary. Explain why this is.

In a climax community there are continuing inputs and outputs of matter and energy but the system as a whole is in more or less steady-state equilibrium. This equilibrium will vary depending on the climatic factors, properties of the local soil and a range of random events.

8. a) List the ways in which humans can disrupt the process of succession.

Agriculture, hunting, forest clearing, burning and grazing - all divert the progression of succession to an alternative stable state - original climax not reached

b) When succession is disrupted, the system may recover quickly or slowly from the disruption, depending on its resilience. Explain what is meant by ecosystem resilience.

The ability of a system to return to its initial state after a disturbance. The more complex and diverse an ecosystem, the more resilient it will be as there are more interactions between different species.

See Booklet 1.3